DEUBLIN

⅛" to ½" Air-Hydraulic Unions

- Monoflow design
- Self-supported rotating union
- Radial housing connection
- Balanced mechanical seal
- Seal combinations:
  Carbon Graphite/Hardened Tool Steel or
  Carbon Graphite/Silicon Carbide
- Felt oiler in seal cavity for air service
- Oiler for relubrication (3 - 5 drops/month)
- Low torque
- Weight-optimized design
- Aluminum housing
- Bearings lubricated for life

Operating Data

Maximum Air Pressure	150 PSI	10 bar
Maximum Vacuum	28" Hg	6.7 kPa
Maximum Hydraulic Pressure		
Model 1005	1,000 PSI	70 bar
Model 1102	1,000 PSI	70 bar
Model 1115	500 PSI	34 bar
Model 1205	750 PSI	50 bar
Model 2200*	1,000 PSI	70 bar
Maximum Speed NPT Threads	1,500 RPM	1,500/min
Maximum Speed Straight Threads	3,500 RPM	3,500/min
Maximum Temperature	250°F	120°C

* Union is designed for continuous operation at either maximum speed or maximum pressure. If operating conditions are close to maximum pressure and speed simultaneously, consult ***DEUBLIN***.

See next page for dimensional data.

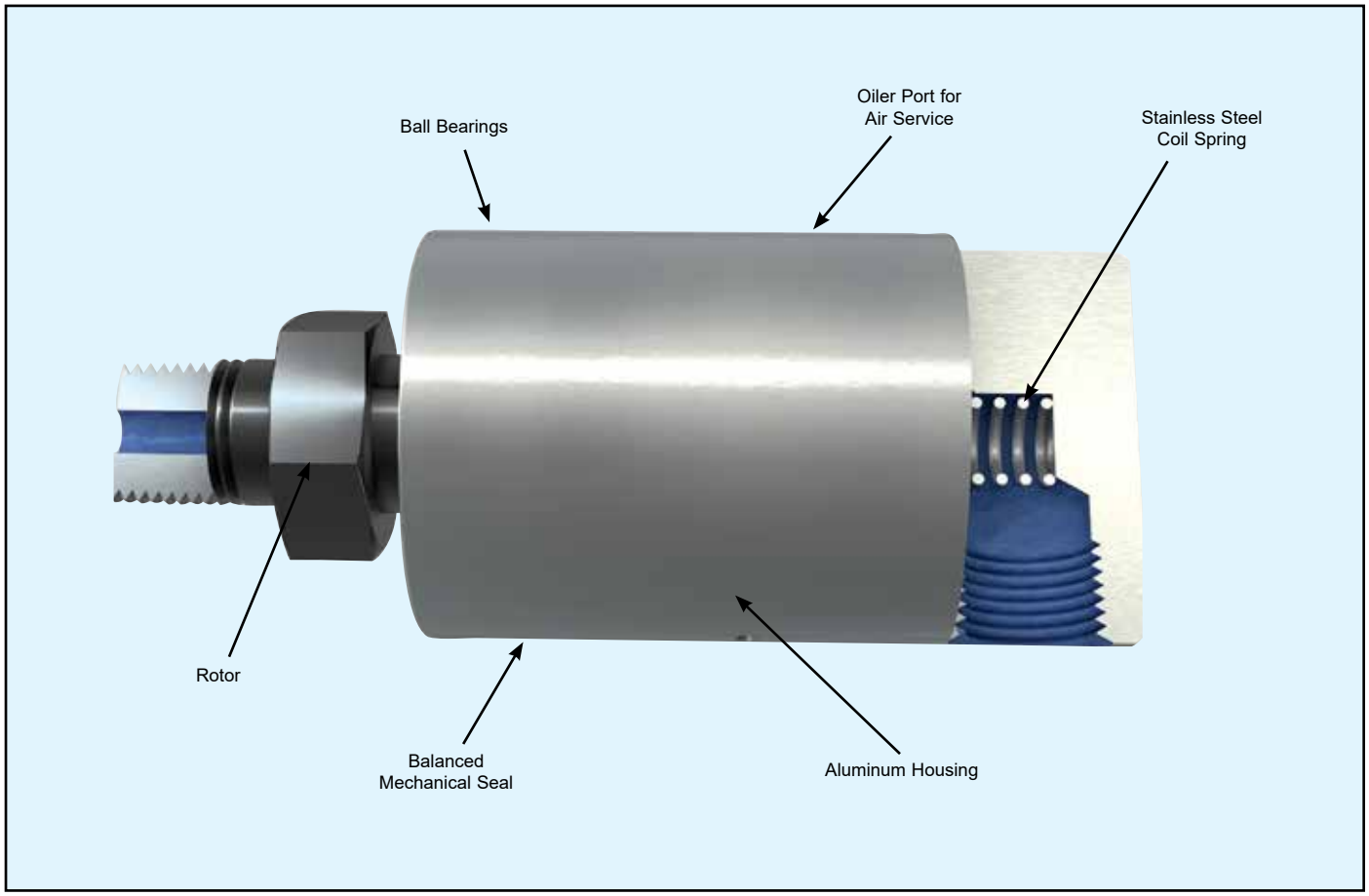

Monoflow Rotating Union

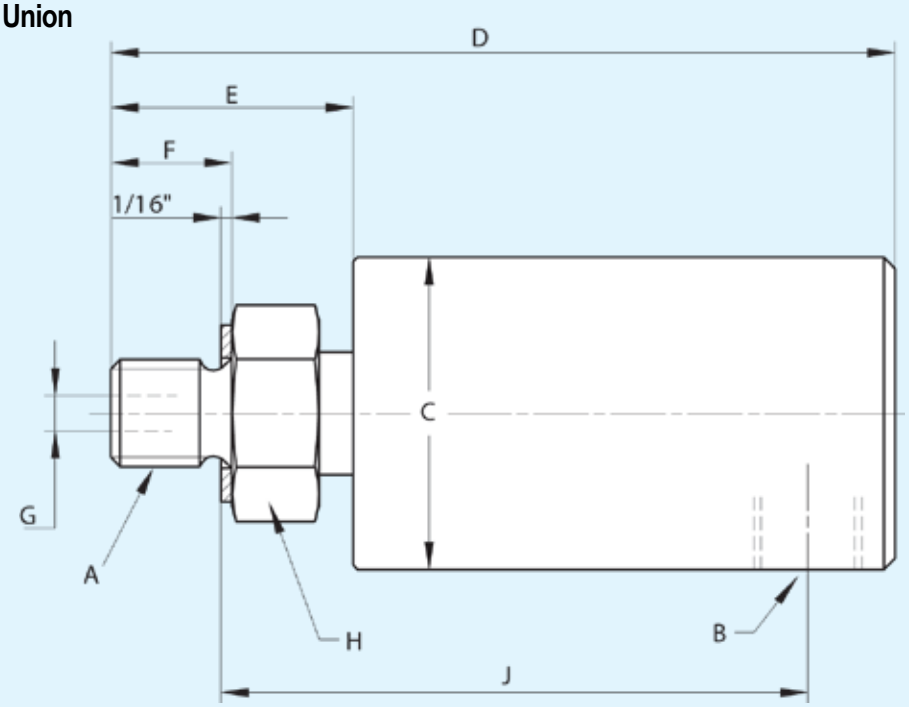

B Port NPT	Ordering No. / Model	A Rotor Thread		C Dia.	D	E	F	G Rotor Hole	H* Across Flats	J Lock-up	Shpg. Wt.
1/8"	1005-020-019	3/8"-24 UNF	RH	1 1/8"	2 13/16"	7/8"	1/2"	1/8"	17	2 1/16"	1/2#
	1005-020-039	3/8"-24 UNF	LH								
	1005-020-038	1/8" NPT	RH								
	1005-020-037	M10x1	RH	28.5	71	22	11	3.2	17	54	.2 Kg
	1005-020-049	G1/4" (BSP)	RH	28.5	71	22	13	3.2	17	52	.2 Kg
1/4"	1102-070-029	5/8"-18 UNF	RH	1 5/8"	3 3/16"	1 1/8"	5/8"	1/4"	22	2 1/4"	1#
	1102-070-079	5/8"-18 UNF	LH								
	1102-070-081	1/4" NPT	RH	1 5/8"	3 3/16"	1 1/8"	5/8"	1/4"	22	2 15/32"	1#
	1102-070-082	1/4" NPT	LH								
	1102-070-103	G1/4" (BSP)	RH	41.2	81	29	13	6.4	22	60	.4 Kg
	1102-070-104	G1/4" (BSP)	LH								
3/8"	1115-000-001	5/8"-18 UNF	RH	1 23/32"	3 15/16"	1 1/16"	5/8"	3/8"	24	2 27/32"	1 1/2#
	1115-000-017	5/8"-18 UNF	LH								
	1115-000-002	3/8" NPT	RH	1 23/32"	3 15/16"	1 1/16"	5/8"	3/8"	24	3 1/8"	1 1/2#
	1115-000-018	1/4" NPT	RH								
	1115-000-205	G3/8" (BSP)	RH	43.6	100	27	16.6	8.7	24	71.4	.7 Kg
	1115-000-200	M16x2	RH	43.6	100	27	16	8.7	24	72.2	.7 Kg
1/2"	1205-000-003	1/2" NPT	RH	2 1/4"	4 9/16"	1 7/16"	7/8"	1/2"	30	3 1/2"	1 1/2#
	1205-000-004	1/2" NPT	LH								
	1205-000-019	3/4" NPT	RH	2 1/4"	4 9/16"	1 7/16"	7/8"	5/8"	30	3 15/32"	1 1/2#
	1205-000-020	3/4" NPT	LH								
	1205-000-039	3/4"-16 UNF	RH	2 1/4"	4 7/16"	1 5/16"	3/4"	1/2"	30	3 1/16"	1 1/2#
	1205-000-025	3/4"-16 UNF	LH								
	1205-000-001	1"-14 UNS	RH	2 1/4"	4 13/32"	1 9/32"	3/4"	5/8"	36	3 1/32"	1 1/2#
	1205-000-002	1"-14 UNS	LH								
	1205-000-012	G1/2" (BSP)	RH	57.1	113	33.3	19	12.7	30	77.7	.7 Kg
	1205-000-013	G1/2" (BSP)	LH								
	1205-000-021	G3/4" (BSP)	RH	57.1	112	32.5	19	15.8	36	77	.7 Kg
	1205-000-022	G3/4" (BSP)	LH								
1/2"	2200-000-096	1/2" NPT	RH	2 7/8"	4 15/16"	1 7/16"	7/8"	1/2"	32	3 3/4"	3#
	2200-000-097	1/2" NPT	LH								
	2200-000-098	3/4" NPT	RH	2 7/8"	4 15/16"	1 7/16"	7/8"	11/16"	32	3 3/4"	3#
	2200-000-099	3/4" NPT	LH								
	2200-000-003	1"-14 UNS	RH	2 7/8"	4 13/16"	1 5/16"	3/4"	21/32"	32	3 7/16"	3#
	2200-000-027	1"-14 UNS	LH								
	2200-000-102	G3/4" (BSP)	RH	73	121	34	19	17.5	36	88	1.4 Kg
	2200-000-103	G3/4" (BSP)	LH								

*Metric

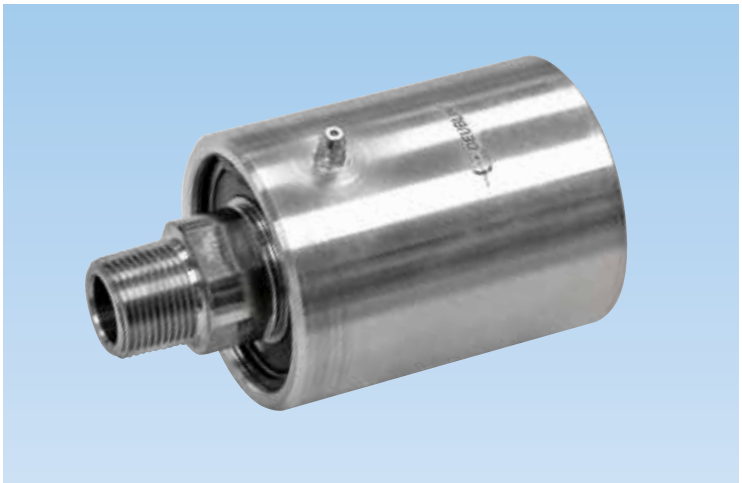

DEUBLIN

¾" to 1½" Air-Hydraulic Unions

- Monoflow design
- Self-supported rotating union
- Radial housing connection
- Balanced mechanical seal
- Seal combinations:
  Carbon Graphite/Hardened Tool Steel or
  Carbon Graphite/Ceramic
- Felt oiler in seal cavity for air service
- Oiler for relubrication (3 - 5 drops/month)
- Low torque
- Aluminum housing
- Stainless steel or steel rotor (respective of model)
- Lubrication Guide page 55

Operating Data

Maximum Air Pressure	150 PSI	10 bar
Maximum Vacuum 28" Hg	6.7 kPa	
Maximum Hydraulic Pressure		
Model 250-094	1,000 PSI	70 bar
Model 355-021	1,000 PSI	70 bar
Model 452-000	750 PSI	50 bar
Maximum Speed NPT Threads	1,500 RPM	1,500/min
Maximum Speed Straight Threads		
Model 250-094	3,500 RPM	3,500/min
Model 355-021	3,000 RPM	3,000/min
Model 452-000	2,500 RPM	2,500/min
Maximum Temperature	250°F	120°C

Union is designed for continuous operation at either maximum speed or maximum pressure. If operating conditions are close to maximum pressure and speed simultaneously, consult ***DEUBLIN***.

To indicate union with additional "K" port with
½" NPT: Order Number 250-979-RTR
¾" NPT: Order Number 355-305-RTR
1¼" NPT: Order Number 452-001-RTR

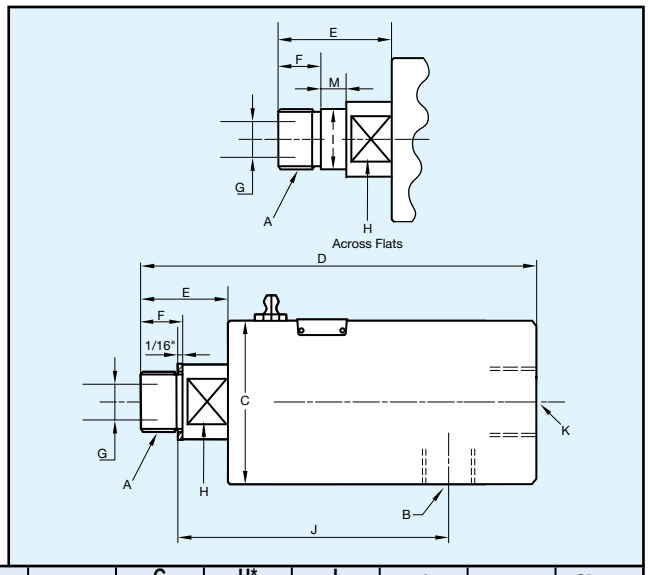

B Port NPT	Ordering No. Model	A Rotor Thread		C	D	E	F	G Rotor Hole	H* Across Flats	I Pilot Dia.	J Lock-up	M	Shpg. Wt.
¾"	250-094-020	¾" NPT	RH	2⅞"	5⅛"	1 7/16"	⅞"	11/16"	32	–	4 1/16"	–	3½#
	250-094-021	¾" NPT	LH										
	250-094-002	1"-14 UNS	RH	2⅞"	5"	1 5/16"	¾"	21/32"	32	–	3 11/16"	–	3½#
	250-094-027	1"-14 UNS	LH										
	250-094-016	1"-14 UNS (PLT)	RH	2⅞"	5 13/16"	2⅛"	¾"	⅝"	41	1.2480" 1.2478"	4"	½"	3½#
	250-094-017	1"-14 UNS (PLT)	LH										
	250-094-284	G¾" (BSP)	RH	73	128	34	19	17.5	36	–	94	–	1.6 Kg
	250-094-285	G¾" (BSP)	LH										
	250-094-012	M22x1.5 (PLT)	RH	73	122	28	14	14.3	36	26.992 26.979	87.5	3	1.6 Kg
	250-094-013	M22x1.5 (PLT)	LH										
1"	355-021-002	1" NPT	RH	3¼"	6 3/16"	1 15/16"	1⅛"	1"	36	–	4 13/16"	–	4½#
	355-021-003	1" NPT	LH										
	355-021-019	1½"-12 UNF	RH	3¼"	6 3/16"	1 15/16"	1⅛"	1"	36	–	4¼"	–	4½#
	355-021-074	1½"-12 UNF	LH										
	355-021-016	1½"-12 UNF (PLT)	RH	3¼"	6 9/16"	2 5/16"	1"	1"	36	1.5610" 1.5605"	4 3/16"	½"	4½#
	355-021-017	1½"-12 UNF (PLT)	LH										
	355-021-222	G1" (BSP)	RH	82.6	150	42	21	22.2	38	–	108	–	2.1 Kg
	355-021-223	G1" (BSP)	LH										
1½"	452-000-001	1½" NPT	RH	4¼"	7 11/16"	2 7/16"	1 3/16"	1½"	55	–	5 13/16"	–	9.5#
	452-000-002	1½" NPT	LH										
	452-000-395	2"-12 UN	RH	4¼"	8 1/16"	2 13/16"	1⅛"	1½"	55	–	5⅝"	–	9.5#
	452-000-396	2"-12 UN	LH										
	452-000-029	1¾"-12 UN	RH	4¼"	8 7/16"	3 3/16"	⅞"	1¼"	55	–	6¼"	–	9.5#
	452-000-109	1¾"-12 UN	LH										
	452-000-198	G1½" (BSP)	RH	108	205	72	29	35	55	–	143	–	4.5 Kg
	452-000-199	G1½" (BSP)	LH										

*Metric

Deublin In-The-Shaft Mounted Unions

Model 1005-000-038 ⅛" Capacity—for Air or Hyd. Oil

Available with 1005 rotors shown on page 32. To meet the specifications of engineering designs requiring minimum overhang. Deublin can provide unions which can be mounted within the shaft. With these models, the only extensions beyond the end of the shaft are the supply line connections.

Operating Data

Maximum Air Pressure	150 PSI	10 bar
Maximum Hydraulic Pressure*	1,000 PSI	70 bar
Maximum Speed*	3,500 RPM	3,500/min
Maximum Temperature	250°F	120°C

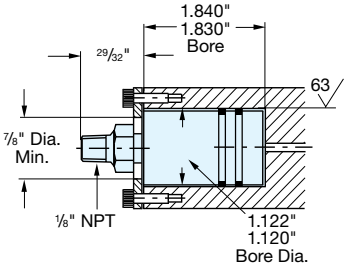

Model 1102-025-081 ¼" Capacity—for Air or Hyd. Oil

Available with 1102 rotors shown on page 32.
Also available with hub mount for CTIS.
See page 52.

Operating Data

Maximum Air Pressure	150 PSI	10 bar
Maximum Hydraulic Pressure*	1,000 PSI	70 bar
Maximum Speed*	3,500 RPM	3,500/min
Maximum Temperature	250°F	120°C

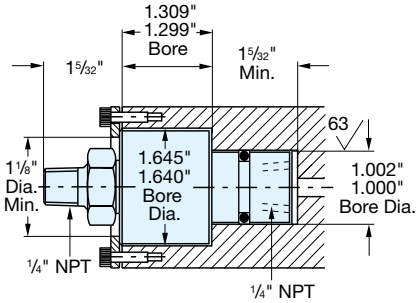

Model 1115-130-002 ⅜" Capacity—for Air or Hyd. Oil

Available with 1115 rotors shown on page 32.

Operating Data

Maximum Air Pressure	150 PSI	10 bar
Maximum Hydraulic Pressure	500 PSI	35 bar
Maximum Speed	3,500 RPM	3,500/min
Maximum Temperature	250°F	120°C

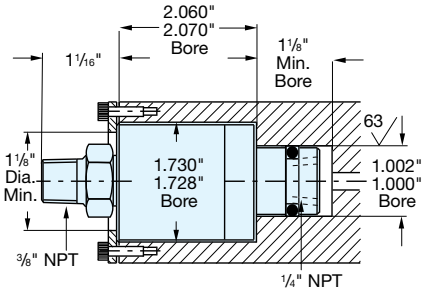

Model 1116-319-248 ⅜" Capacity—for Hydraulic Oil

This model contains E.L.S. seals of silicon carbide to silicon carbide for long life on abrasive applications. Do not run dry.

Operating Data

Maximum Hydraulic Pressure*	1,000 PSI	70 bar
Maximum Speed*	3,500 RPM	3,500/min
Maximum Temperature	250°F	120°C

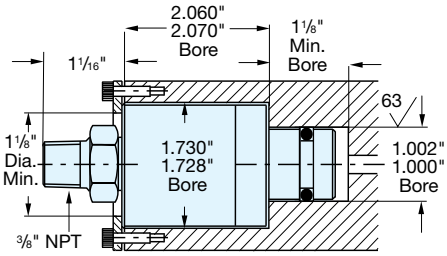

* Union is designed for continuous operation at either maximum speed or maximum pressure.
If operating conditions are close to maximum pressure and speed simultaneously, consult ***DEUBLIN***.

DEUBLIN

AP Series High Pressure High Speed Unions

- Monoflow design
- Self-supported rotating union
- Seal combination: Tungsten Carbide/Tungsten Carbide
- Double row ball bearing; lubricated for life
- Vent holes
- Steel housing nickel-plated
- Stainless steel end cap and rotor
- All parts in media contact are stainless steel and corrosion resistant
- Designed for high pressure and high speed

Operating Data

Maximum Hydraulic/Water Pressure*	5,700 PSI	400 bar
Maximum Speed*	1,500 RPM	1,500/min
Maximum Temperature	200°F	90°C

* Operation at maximum pressure combined with maximum speed should be avoided. For optional performance, refer to graph. If operating conditions are marginal, consult ***DEUBLIN***.

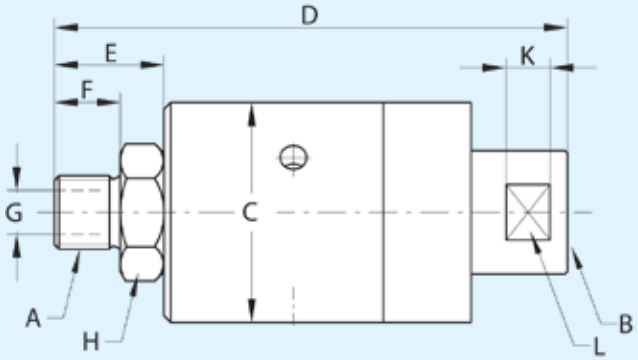

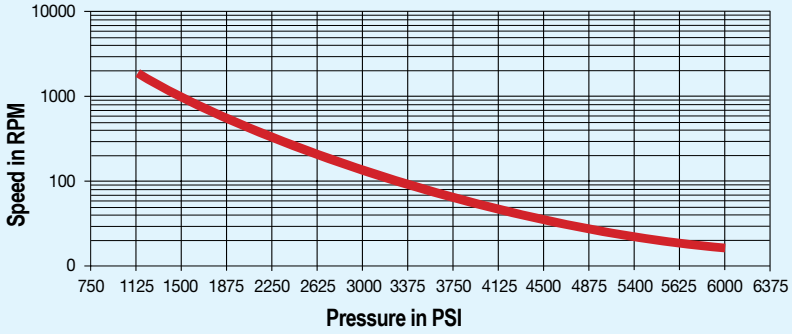

B Inlet Port	Ordering Number	A Rotor Thread	C	D	E	F	G Rotor Hole	H* Across Flats	K	L Across Flats	Shpg. Wt.
1/4" NPT	AP8-011-214	1/4" NPT RH	1 31/32"	4 19/32"	1"	19/32"	9/32"	27	13/32"	1"	1.5#
	AP8-011-215	1/4" NPT LH									
G1/4" (BSP)	AP8-010-210	G1/4" (BSP) RH	50	117	25	15	7	27	10	25	.7 Kg
	AP8-010-211	G1/4" (BSP) LH									
3/8" NPT	AP10-011-214	3/8" NPT RH	1 31/32"	4 19/32"	1"	19/32"	13/32"	27	13/32"	1"	1.5#
	AP10-011-215	3/8" NPT LH									
G3/8" (BSP)	AP10-010-210	G3/8" (BSP) RH	50	117	25	15	10	27	10	25	.7 Kg
	AP10-010-211	G3/8" (BSP) LH									
1/2" NPT	AP12-011-214	1/2" NPT RH	1 31/32"	4 13/16"	1 3/16"	25/32"	15/32"	27	13/32"	1"	2#
	AP12-011-215	1/2" NPT LH									
G1/2" (BSP)	AP12-010-210	G1/2" (BSP) RH	50	122	30	20	12	27	10	25	1 Kg
	AP12-010-211	G1/2" (BSP) LH									

*Metric

DEUBLIN

D Series High Pressure Swivel Low Speed Rotating Unions

- Monoflow design
- For hydraulic oil and water
- For swivel applications and high pressure media
- Steel housing and end cap
- Stainless steel rotor
- Self-supported rotating union
- Can be adapted for other media

Operating Data

Maximum Hydraulic/Water Pressure	6,400 PSI	450 bar
Maximum Speed	20 RPM	20/min
Maximum Temperature	250°F	120°C

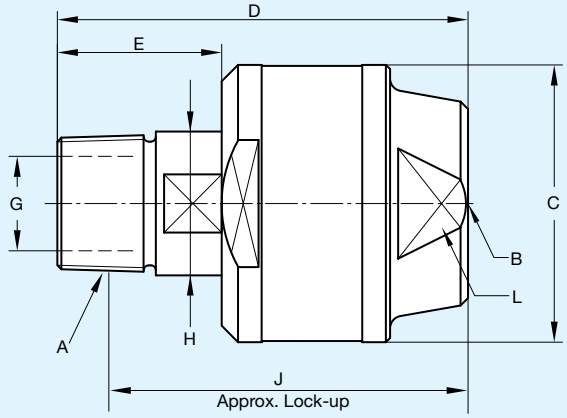

BSP Rotor Detail

B Inlet Port	Ordering Number	A Rotor Connections		C	D	E	F	G Rotor Hole	H* Across Flats	J Lock-up	L Across Flats	Shpg. Wt.
1/4" NPT	D8-004-214	1/4" NPT	RH	1 9/16"	2 11/16"	1"	19/32"	9/32"	12	2 5/16"	15/16"	3/4#
	D8-004-215	1/4" NPT	LH									
G1/4" (BSP)	D8-003-210	G1/4" (BSP)	RH	40	68	25	15	7	12	53	24	.3 Kg
	D8-003-211	G1/4" (BSP)	LH									
3/8" NPT	D10-004-214	3/8" NPT	RH	1 3/4"	2 3/4"	1"	25/32"	13/32"	14	2 3/8"	1 3/32"	7/8#
	D10-004-215	3/8" NPT	LH									
G3/8" (BSP)	D10-003-210	G3/8" (BSP)	RH	44	70	25	15	10	14	55	28	.4 Kg
	D10-003-211	G3/8" (BSP)	LH									
1/2" NPT	D12-004-214	1/2" NPT	RH	2 7/32"	3 7/32"	1 1/4"	25/32"	15/32"	22	2 23/32"	1 1/2"	1 3/4#
	D12-004-215	1/2" NPT	LH									
G1/2" (BSP)	D12-003-210	G1/2" (BSP)	RH	56	82	32	20	12	22	62	38	.8 Kg
	D12-003-211	G1/2" (BSP)	LH									
3/4" NPT	D20-004-214	3/4" NPT	RH	2 7/16"	3 17/32"	1 11/32"	25/32"	23/32"	27	3"	1 21/32"	2 1/4#
	D20-004-215	3/4" NPT	LH									
G3/4" (BSP)	D20-003-210	G3/4" (BSP)	RH	62	90	34	20	18	27	70	42	1.0 Kg
	D20-003-211	G3/4" (BSP)	LH									
1" NPT	D25-004-214	1" NPT	RH	2 11/16"	3 15/16"	1 19/32"	15/16"	29/32"	32	3 1/4"	1 7/8"	2 3/4#
	D25-004-215	1" NPT	LH									
G1" (BSP)	D25-003-210	G1" (BSP)	RH	68	100	40	24	23	32	76	48	1.3 Kg
	D25-003-211	G1" (BSP)	LH									
1 1/4" NPT	D32-004-214	1 1/4" NPT	RH	3 5/32"	4 1/4"	1 11/16"	1"	1 3/16"	42	3 9/16"	2 9/32"	4 1/4#
	D32-004-215	1 1/4" NPT	LH									
G1 1/4" (BSP)	D32-003-210	G1 1/4" (BSP)	RH	80	108	43	25	30	42	83	58	1.9 Kg
	D32-003-211	G1 1/4" (BSP)	LH									
1 1/2" NPT	D40-004-214	1 1/2" NPT	RH	3 15/32"	4 15/32"	1 23/32"	1 1/32"	1 1/2"	46	3 13/16"	2 7/16"	6 1/2#
	D40-004-215	1 1/2" NPT	LH									
G1 1/2" (BSP)	D40-003-210	G1 1/2" (BSP)	RH	88	114	44	26	38	46	88	62	3.0 Kg
	D40-003-211	G1 1/2" (BSP)	LH									

*Metric

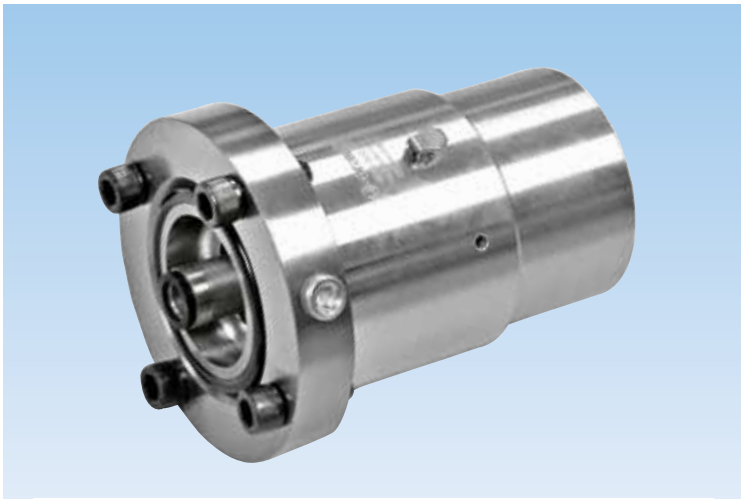

DEUBLIN

Deu-Plex Air Unions

- Duoflow design
- Self-supported rotating union
- Flanged rotor
- Radial housing connections
- Low torque
- Balanced mechanical seals
- Seal combination:
  Carbon Graphite/Cast Iron
- Full-media flow
- Aluminum housing
- Cast iron rotor
- Oil cup (3-5 drops/month)

Operating Data

Maximum Air Pressure	150 PSI	10 bar
Maximum Vacuum	28" Hg	6.7 kPa
Maximum Speed	1,500 RPM	1,500/min
Maximum Temperature	250°F	120°C

Only one passage should be pressurized at a time.

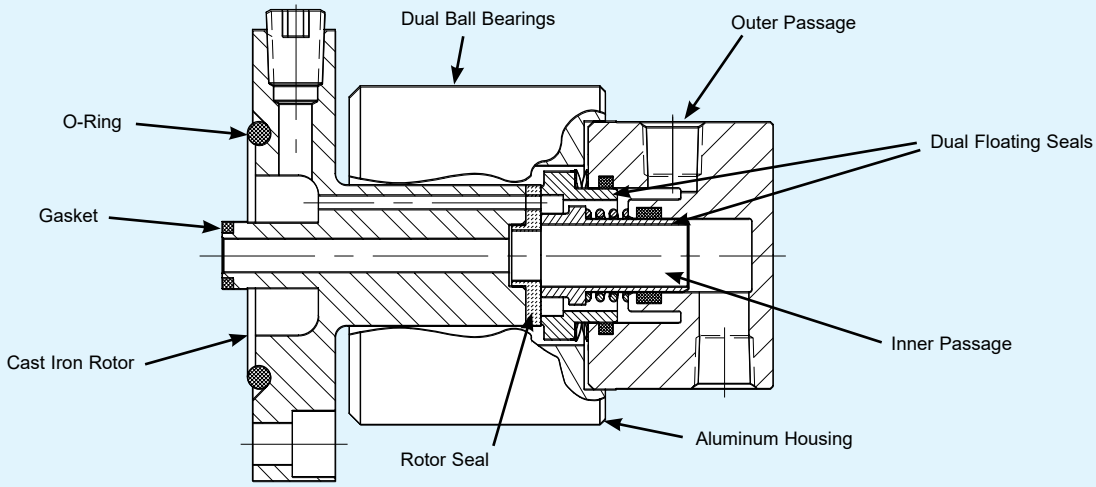

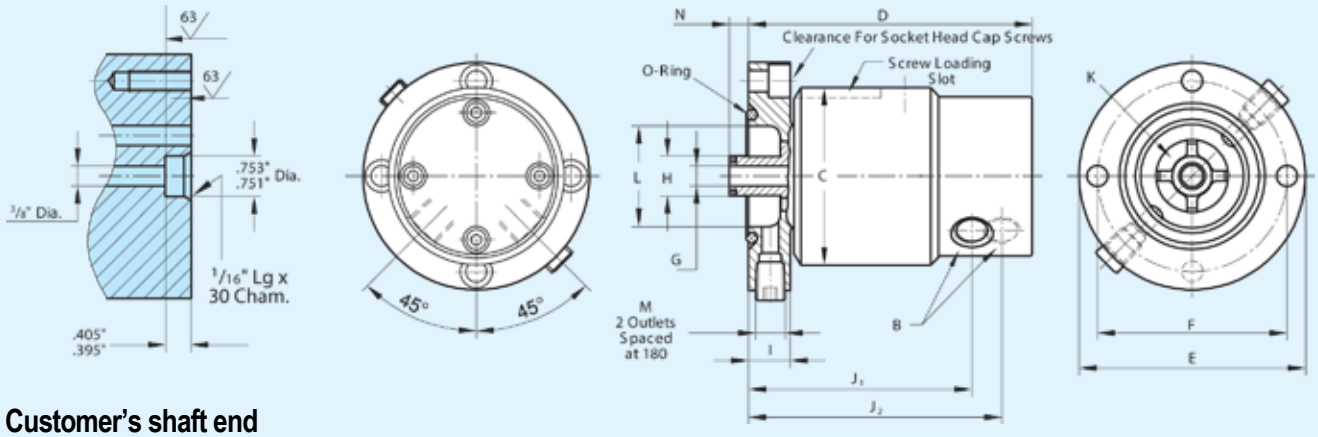

Customer's shaft end

B Port NPT	Ordering No. Model	C	D	E Pilot	F Bolt Circle	G Area	H	I	J_1	J_2	K Area	L	M Tap	N	Screw	Shpg. Wt.
(2) x 3/8"	1500-000	3 5/16"	5 1/4"	4.250" 4.249"	3 9/16"	.1105in²	.750" .748"	3/4"	4 1/8"	4 11/16"	.2304in²	1 7/8"	1/4" NPT	7/16"	3/8"-16	7#
	1500-250	84	133	107.95 107.92	90.5	71mm²	19.05 19.00	19	105	119	150mm²	48	1/4" NPT	11.1	M10	3.2 Kg

DEUBLIN

2620 Series 2-Passage Rotating Unions for Various Media

- Two independent passages for applications such as clamping and unclamping
- Balanced mechanical seals for each passage provide long life and reduced torque even at maximum pressure
- Closed seals provide continuous containment of media
- Dual precision ball bearings for smooth operation
- Labyrinth protection for ball bearings
- Mountings options are compatible with *DEUBLIN* 2520 or 1579 series unions

Operating Data

Media	See table	
Filtration	ISO 4406 Class 17/15/12, max. 60 micron	
Maximum Speed	7,000 min^{-1}	7,000 rpm
Maximum Pressure	See table	
Maximum Flow	69 l/min	18.2 gpm (per passage)
Maximum Temperature	160°F	71°C

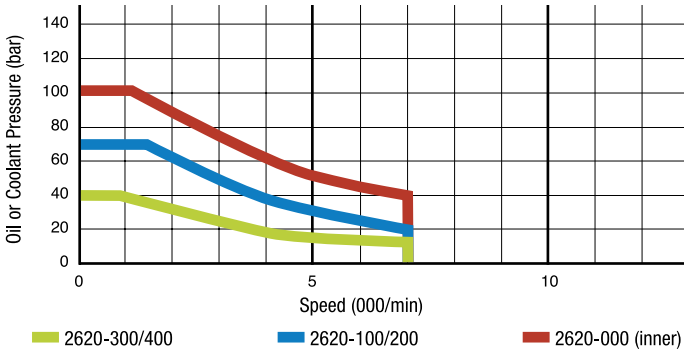

Note: Refer to Page 37 for mounting details.

2620-XXX-252 shown

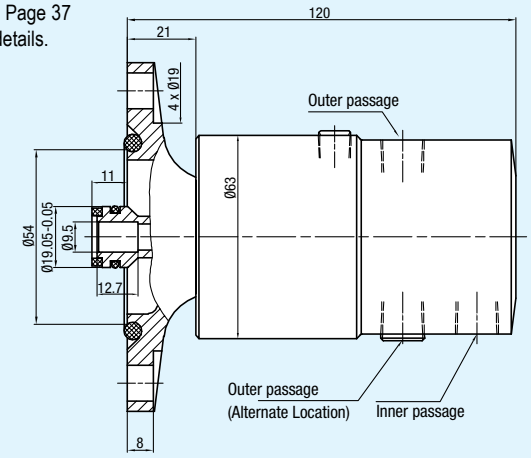

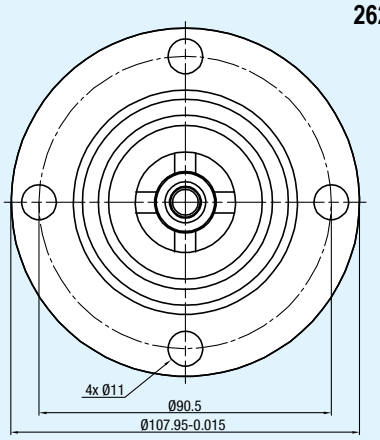

	With Ø 108 mm flanged rotor		With Ø 88 mm flanged rotor			With Ø 81 mm flanged rotor		Inner Passage		Outer Passage		Notes
	Ordering Number	Supply Connections Inner and Outer Passage	Ordering Number	Supply Connections Inner Passage	Supply Connections Outer Passage	Ordering Number	Supply Connections Inner and Outer Passage	Media	Max. Pressure {bar}	Media	Max. Pressure {bar}	
	2620-000-252	1/4 NPT	2620-002-940	G1/4"	G1/4"	2620-000-157	1/4 NPT	Hydraulic oil	100	Hydraulic oil	30	
	2620-100-252	1/4 NPT	2620-102-940	G3/8"	G1/8"	2620-100-157	1/4 NPT	Hydraulic oil	70	Air	6	Air seals may be lubricated through oil cup or by using oiled air.
	2620-120-252	1/4 NPT	2620-122-940	G3/8"	G1/8"	2620-120-157	1/4 NPT	Hydraulic oil	70	Air	10	
	2620-200-252	1/4 NPT	2620-202-940	G3/8"	G1/8"	2620-200-157	1/4 NPT	Coolant	70	Air	6	
	2620-220-252	1/4 NPT	2620-222-940	G3/8"	G1/8"	2620-220-157	1/4 NPT	Coolant	70	Air	10	
	2620-300-252	1/4 NPT	2620-302-940	G1/4"	G1/4"	2620-300-157	1/4 NPT	Air	6	Hydraulic oil	40	Air seals require no external lubrication.
	2620-320-252	1/4 NPT	2620-322-940	G1/4"	G1/4"	2620-320-157	1/4 NPT	Air	10	Hydraulic oil	40	
	2620-400-252	1/4 NPT	2620-402-940	G1/4"	G1/4"	2620-400-157	1/4 NPT	Air	6	Coolant	40	
	2620-420-252	1/4 NPT	2620-422-940	G1/4"	G1/4"	2620-420-157	1/4 NPT	Air	10	Coolant	40	
	2620-500-252	1/4 NPT	2620-502-940	G3/8"	G1/8"	2620-500-157	1/4 NPT	Air	6	Air	6	Consult DEUBLIN regarding maximum speed.
	2620-520-252	1/4 NPT	2620-522-940	G3/8"	G1/8"	2620-520-157	1/4 NPT	Air	10	Air	10	

DEUBLIN

2620 Series 2-Passage Rotating Unions for Various Media

- Two independent passages for applications such as clamping and unclamping, work piece sensing, and cooling
- Balanced mechanical seals for each passage provide long life and reduced torque even at maximum pressure
- Closed seals provide continuous containment of media
- Dual precision ball bearings for smooth operation
- Labyrinth protection for ball bearings
- Mountings options are compatible with *DEUBLIN* 2520 or 1579 series unions

Operating Data

Media	See table	
Filtration	ISO 4406 Class 17/15/12, max. 60 micron	
Maximum Speed	12,000 min-1	12,000 rpm
Maximum Pressure	See table	
Maximum Flow	69 l/min	18.2 gpm (per passage)
Maximum Temperature	71°C	160°F

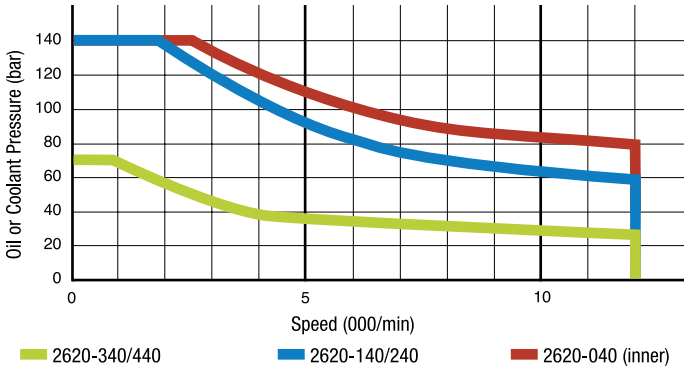

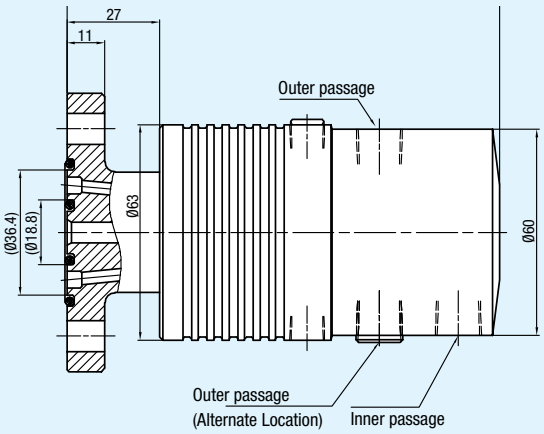

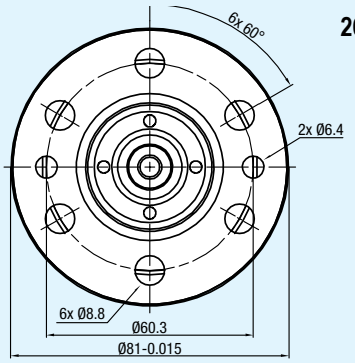

2620-XXX-157 shown

	With Ø 108 mm flanged rotor		With Ø 88 mm flanged rotor			With Ø 81 mm flanged rotor		Inner Passage		Outer Passage		Notes
	Ordering Number	Supply Connections Inner and Outer Passage	Ordering Number	Supply Connections Inner Passage	Supply Connections Outer Passage	Ordering Number	Supply Connections Inner and Outer Passage	Media	Max. Pressure {bar}	Media	Max. Pressure {bar}	
	2620-040-252	1/4 NPT	2620-042-940	G1/4"	G1/4"	2620-040-157	1/4 NPT	Hydraulic oil	140	Hydraulic oil	70	
	2620-140-252	1/4 NPT	2620-142-940	G3/8"	G1/8"	2620-140-157	1/4 NPT	Hydraulic oil	140	Air	6	Air seals may be lubricated through oil cup or by using oiled air.
	2620-160-252	1/4 NPT	2620-162-940	G3/8"	G1/8"	2620-160-157	1/4 NPT	Hydraulic oil	140	Air	10	
	2620-240-252	1/4 NPT	2620-242-940	G3/8"	G1/8"	2620-240-157	1/4 NPT	Coolant	140	Air	6	
	2620-260-252	1/4 NPT	2620-262-940	G3/8"	G1/8"	2620-260-157	1/4 NPT	Coolant	140	Air	10	
	2620-340-252	1/4 NPT	2620-342-940	G1/4"	G1/4"	2620-340-157	1/4 NPT	Air	6	Hydraulic oil	70	Air seals require no external lubrication.
	2620-360-252	1/4 NPT	2620-362-940	G1/4"	G1/4"	2620-360-157	1/4 NPT	Air	10	Hydraulic oil	70	
	2620-440-252	1/4 NPT	2620-442-940	G1/4"	G1/4"	2620-440-157	1/4 NPT	Air	6	Coolant	70	
	2620-460-252	1/4 NPT	2620-462-940	G1/4"	G1/4"	2620-460-157	1/4 NPT	Air	10	Coolant	70	

DEUBLIN

Deu-Plex Air and Hydraulic Unions

- Duoflow design
- Self-supported rotating union
- Flanged rotor
- Balanced mechanical seals
- Seal combination for 1590:
  Carbon Graphite/Ceramic
- Seal combinations for 1579:
  Carbon Graphite/Ceramic - standard
  Tungsten Carbide/Ceramic - E.L.S.
- Full-media flow
- Aluminum housing
- Cast iron rotor
- Oil cup (3-5 drops/month for 1590)

Operating Data

Maximum Air Pressure (1590)*	150 PSI	10 bar
Maximum Hydraulic Pressure (1579)**	1,000 PSI	70 bar
Maximum Vacuum (1590)	28" Hg	6.7 kPa
Maximum Speed	1,500 RPM	1,500/min
Maximum Temperature	250°F	120°C

* Only one passage should be pressurized at a time.

Operation at maximum pressure combined with maximum speed should be avoided. Pressure rating is for inner passage only. Contact **DEUBLIN if outer passage or both passages are pressurized.

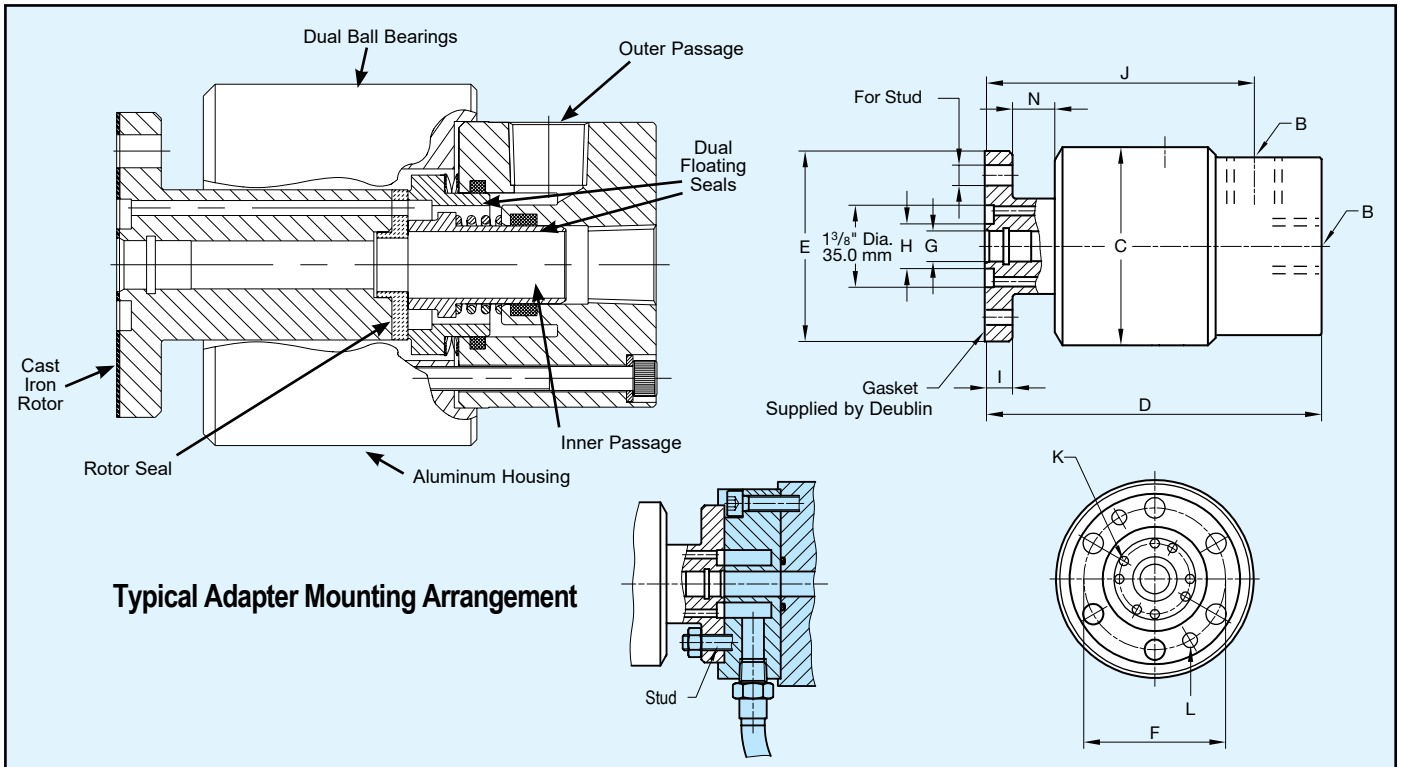

Typical Adapter Mounting Arrangement

B Port NPT	Ordering No.	Media	C	D	E Pilot	F Bolt Circle	G Area	H	I	J	K Area	L Dowel	N	Stud	Shpg. Wt.
(2)x½"	1590-000	Air	3 5/16"	5 19/32"	3.189" 3.187"	2 3/8"	.1964in²	3/4"	7/16"	4 7/16"	.1536in²	1/4"	5/8"	5/16"	7#
			84	142	81.00 80.95	60.3	126mm²	19	11	113	100mm²	6.3	15.8	M8	3.2 Kg
	1579-000 STD	Hydraulic Oil	3 5/16"	5 19/32"	3.189" 3.187"	2 3/8"	.1964in²	3/4"	7/16"	4 7/16"	.1536in²	1/4"	5/8"	5/16"	7#
			84	142	81.00 80.95	60.3	126mm²	19	11	113	100mm²	6.3	15.8	M8	3.2 Kg
	1579-041 ELS	Hydraulic Oil	3 5/16"	5 19/32"	3.189" 3.187"	2 3/8"	.1964in²	3/4"	7/16"	4 7/16"	.1536in²	1/4"	5/8"	5/16"	7#
			84	142	81.00 80.95	60.3	126mm²	19	11	113	100mm²	6.3	15.8	M8	3.2 Kg

DEUBLIN

4-Passage Multi-Purpose, Multi-Media Unions

- 4-passage design
- Self-supported rotating union
- Flanged rotor
- Drain passage prevents interpassage leakage
- Special seals
- Hardened sealing surface
- Brass housing
- Stainless steel rotor
- Widely spaced ball bearings to withstand side load
- 5-passage available

A drain port is provided to collect leakage under normal operation. A vent is provided between ports 2 and 3 to allow use with two medias eliminating cross contamination.

Example: Air in 1 & 2 and hydraulic oil in 3 & 4.

Operating Data

Maximum Air Pressure*	150 PSI	10 bar
Maximum Hydraulic Pressure*	850 PSI	60 bar
Maximum Vacuum	28" Hg	6.7 kPa
Maximum Speed	250 RPM	250/min
Maximum Temperature	175°F	>175°F consult **DEUBLIN**
Slow speed or turnable applications not exceeding 10 RPM		
Maximum Hydraulic Pressure	3,600 PSI	250 bar

* Operating conditions vary depending on the application and must be adjusted so as not to exceed the maximum union housing temperature rating of 195°F.

Customer's Shaft End

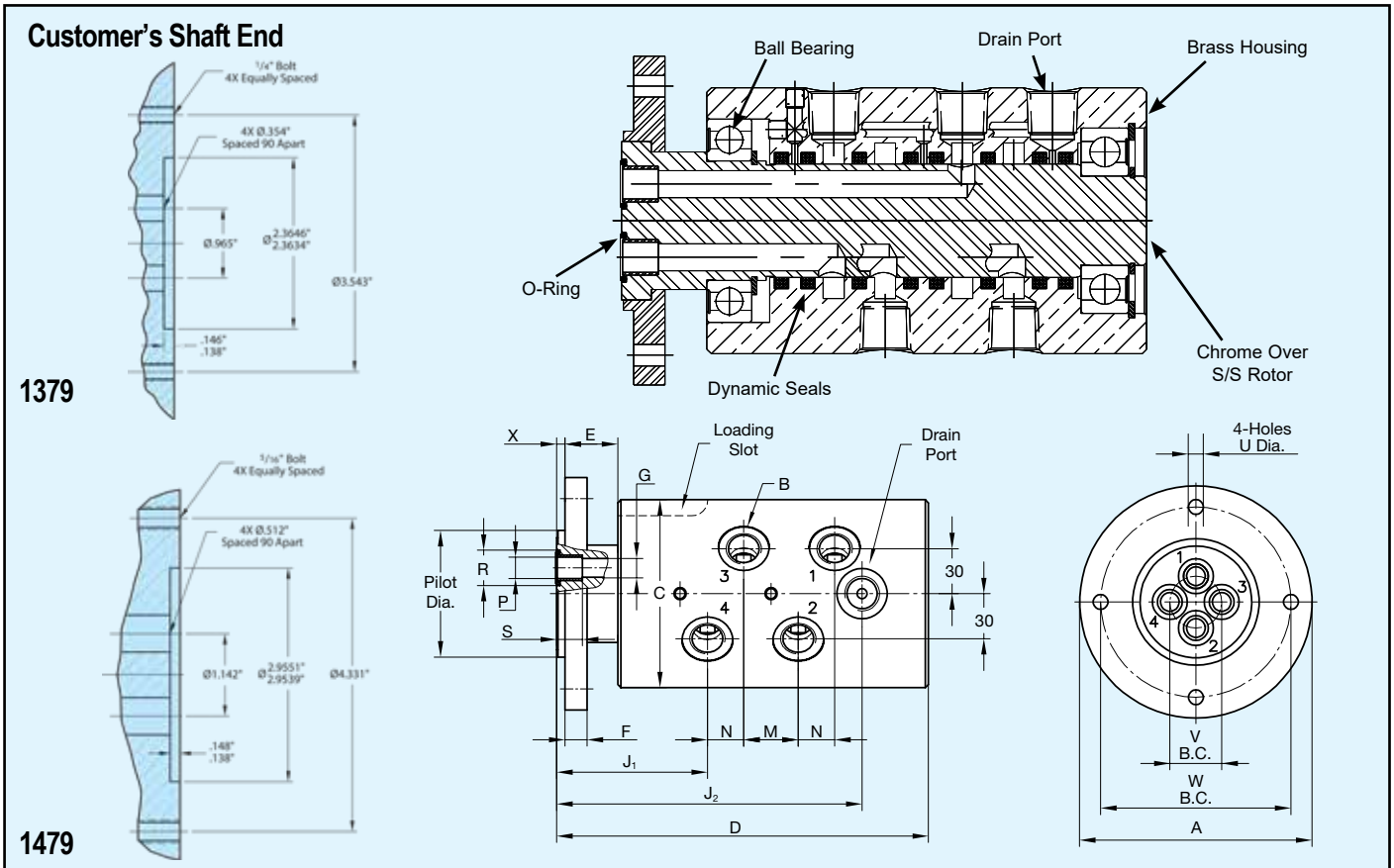

B Port	Order No. / Model	A Dia.	C Dia.	D	E	F	G Dia.	J_1 Lock-up	J_2	M	N	P Dia.	R Dia.	S	U Dia.	V B.C. Dia.	W B.C. Dia.	Pilot Dia.	X	Shpg. Wt.
(4) x 3/8" NPT	1379-460	4 21/64"	3 1/2"	6 15/16"	1"	13/32"	23/64"	2 27/32"	5 19/32"	1 1/32"	23/32"	.4744" .4724"	.660" .655"	1/2"	9/32"	31/32"	3.543	2.3622" 2.3614"	5/32"	16.7#
(4) x G3/8" (BSP)	1379-160	110	89	176	25	10.5	9	72	142	26	18	12.05 12.00	16.75 16.65	12	7.2	24.5	90	60.000 59.981	4	7.6 Kg
(4) x 1/2" NPT	1479-400	5 1/8"	4 1/4"	7 31/32"	1"	17/32"	1/2"	3 3/16"	6 21/32"	1 7/32"	29/32"	.5910" .5905"	.778" .773"	19/32"	11/32"	1 9/64"	4.331	2.953" 2.952"	5/32"	28#
(4) x G1/2" (BSP)	1479-100	130	108	202	25	13.5	13	81	169	32	23	15.05 15.00	19.75 19.65	15	9	29	110	75.000 74.981	4	12.7 Kg

DEUBLIN

Low Speed Air, Hydraulic, Brake Fluid Unions

- Monoflow design
- Self-supported rotating union
- Steel rotor nickel-plated
- Special bearing
- Aluminum housing

Operating Data

Maximum Air Pressure	150 PSI	10 bar
Maximum Vacuum	28" Hg	6.7 kPa
Maximum Hydraulic Pressure*	3,000 PSI	207 bar
Maximum Speed*	250 RPM	250/min
Maximum Temperature	250°F	120°C

* Union is designed for continuous operation at either maximum speed or maximum pressure. If operating conditions are close to maximum pressure and speed simultaneously, consult ***DEUBLIN***.

-045 Rotor

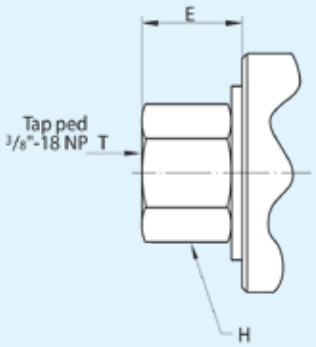

-023 & -048 Rotors

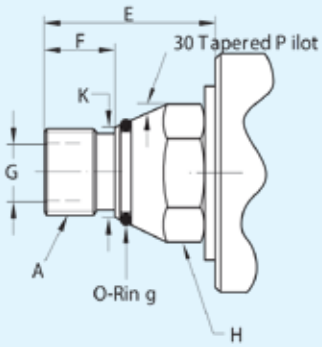

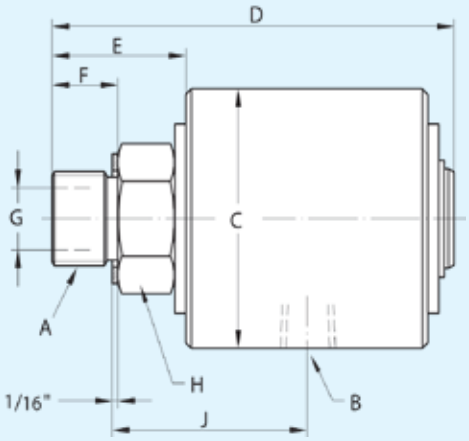

B Port NPT	Ordering Number		A Rotor Thread		C	D	E	F	G Rotor Hole	H* Across Flats	J Lock-up	K	Shpg. Wt.
	Air-Hydraulic-Vacuum	Brake Fluid											
¼"	17-025-012	17-086-012	5/8"-18 UNF	RH	1½"	3¼"	1⅛"	⅝"	5/16"	22	1 17/32"	-	½#
	17-025-041	17-086-041	⅜" NPT	RH	1½"	3¼"	1⅛"	⅝"	5/16"	22	1 25/32"	-	½#
	17-025-045	17-086-045	⅜" NPT (FEM)	RH	1½"	2 15/16"	13/16"	-	5/16"	22	1 13/32"	-	½#
	17-025-023	17-086-023	⅝"-18 UNF T.PLT.	RH	1½"	3 15/32"	1 11/32"	⅝"	5/16"	22	-	⅝"	½#
	17-025-039	17-086-039	G⅜"(BSP)	RH	38	83.3	28.5	16.6	8	22	39	-	.3 Kg
	17-025-046	17-086-046	M16 x 2	RH	38	83.3	28.5	15.8	8	22	39	-	.3 Kg
	17-025-048	17-086-048	M16x2 T.PLT.	RH	38	89	35	15.8	8	22	-	15.8	.3 Kg
½"	21-001-109	21-063-109	1"-14 UNS	RH	2¾"	4 9/16"	1½"	¾"	⅝"	36	2¼"	-	2½#
	21-001-101	21-063-101	¾" NPT	RH	2¾"	4 11/16"	1⅝"	⅞"	⅝"	36	2 19/32"	-	2½#
	21-001-122	21-063-122	G¾"(BSP)	RH	70	116	38	19	15.8	36	57	-	1.2 Kg
	21-001-121	21-063-121	M22 x 1.5	RH	70	111	33	14.2	12.7	36	57	-	1.2 Kg

*Metric

DEUBLIN

Tandem Air, Hydraulic, Brake Fluid Dual Passage Unions

- Duoflow (Tandem) design
- Self-supported rotating union
- No interpassage leakage on the duoflow design
- Steel rotor nickel-plated
- Special bearing
- Aluminum housing

Operating Data

Maximum Air Pressure	150 PSI	10 bar
Maximum Vacuum	28" Hg	6.7 kPa
Maximum Hydraulic Pressure*	3,000 PSI	207 bar
Maximum Speed*	250 RPM	250/min
Maximum Temperature	250°F	120°C

* Union is designed for continuous operation at either maximum speed or maximum pressure. If operating conditions are close to maximum pressure and speed simultaneously, consult ***DEUBLIN***.

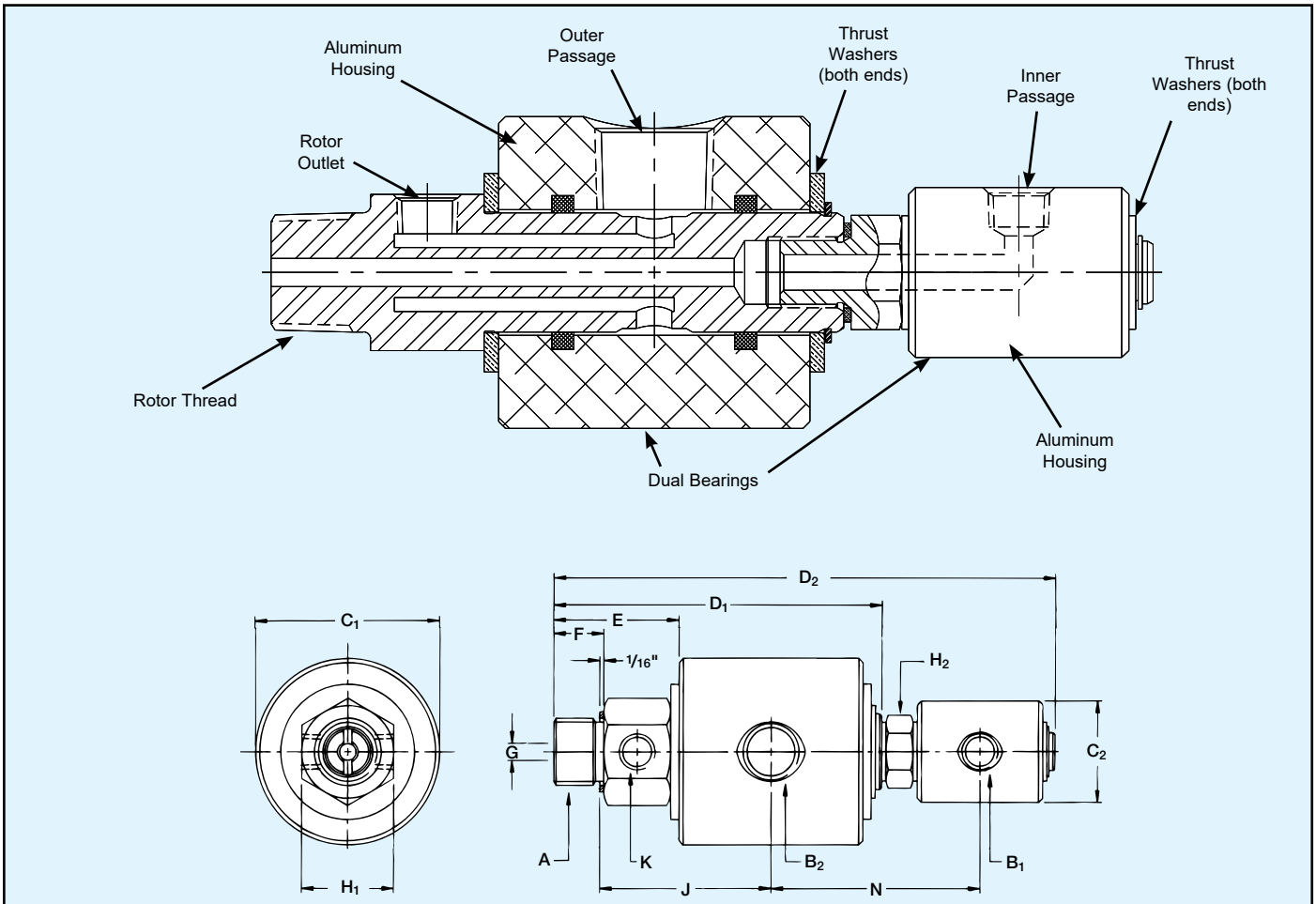

Inlet Ports NPT	Ordering Number		A Rotor Thread	C_1	C_2	D_1	D_2	E	F	G	H_1* Across Flats	H_2* Across Flats	J Lock-Up	K Tap NPT	N Lock-up	Shpg. Wt.
	Air-Hydraulic-Vacuum	Brake Fluid														
B_1 B_2 ¼" ½"	2117-001-109	2117-018-136	¾" NPT RH	2¾"	1½"	4 63/64"	7 11/16"	1 15/16"	⅞"	¼"	36	22	2⅞"	¼"	3 3/16"	3#
	2117-001-103	2117-018-113	1"-14 UNS RH	2¾"	1½"	4 59/64"	7 11/16"	1⅞"	11/16"	¼"	36	22	2 9/16"	¼"	3 3/16"	3#
	2117-001-105	2117-018-137	G¾"(BSP) RH	70	38	124	195	47	17	6	36	22	65	¼"	81	1.4 Kg

*Metric

DEUBLIN

Deu-Plex Low Speed Air-Hydraulic Unions

- Duoflow design
- Self-supported rotating union
- Composite bearing
- Vent holes between passages
- Special seals
- Hardened sealing surface
- Aluminum housing
- Steel rotor

Optional:
- Tandem model as triple-passage design

Operating Data

Maximum Air Pressure		150 PSI	10 bar
Maximum Vacuum Pressure		28" Hg	6.7 kPa
Maximum Hydraulic Pressure*		3,000 PSI	207 bar
Maximum Speed*		250 RPM	250/min
Torque for	Model 1690	7 ft.lbs	9.5 Nm
	Model 1790	18 ft.lbs	24 Nm
	Model 1890	22 ft.lbs	29.8 Nm
Maximum Temperature		250°F	120°C

* Union is designed for continuous operation at either maximum speed or maximum pressure. If operating conditions are close to maximum pressure and speed simultaneously, consult ***DEUBLIN***.

Models with inner rotors

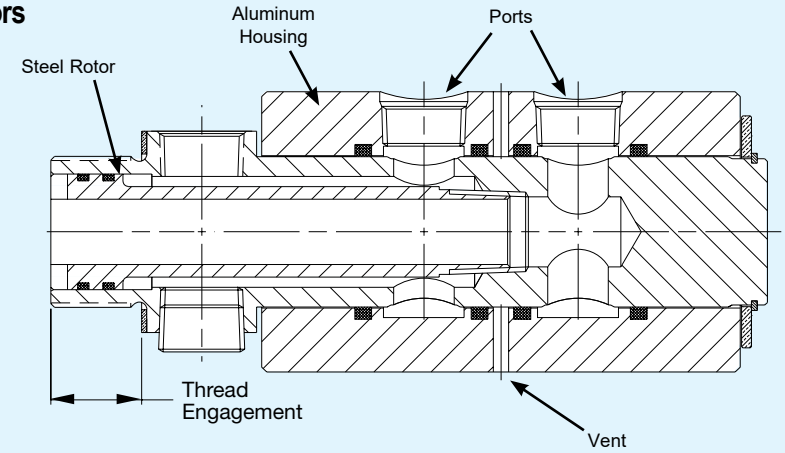

Models without inner rotors can be used for coaxial feed applications as shown below.

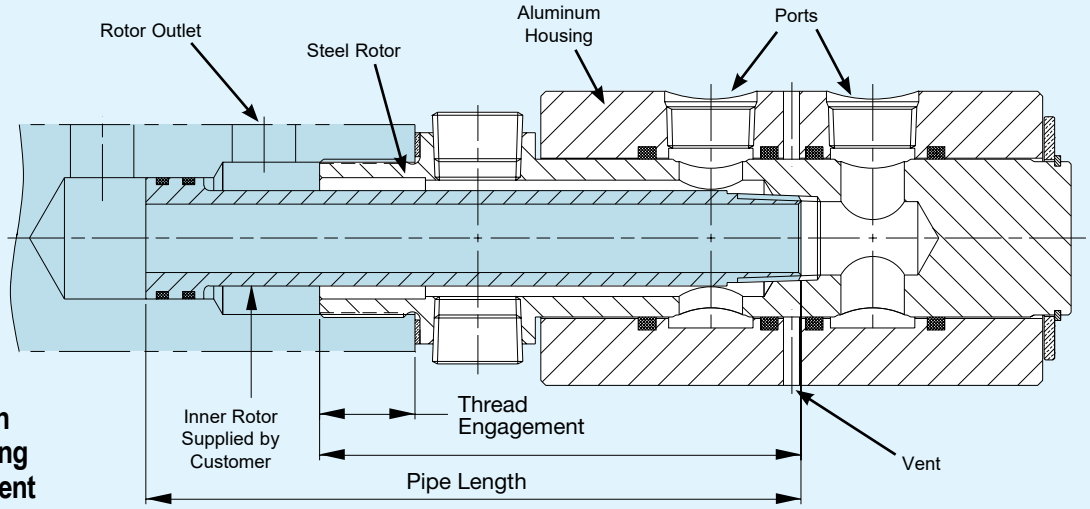

Illustration of mounting arrangement

Double Passage Models

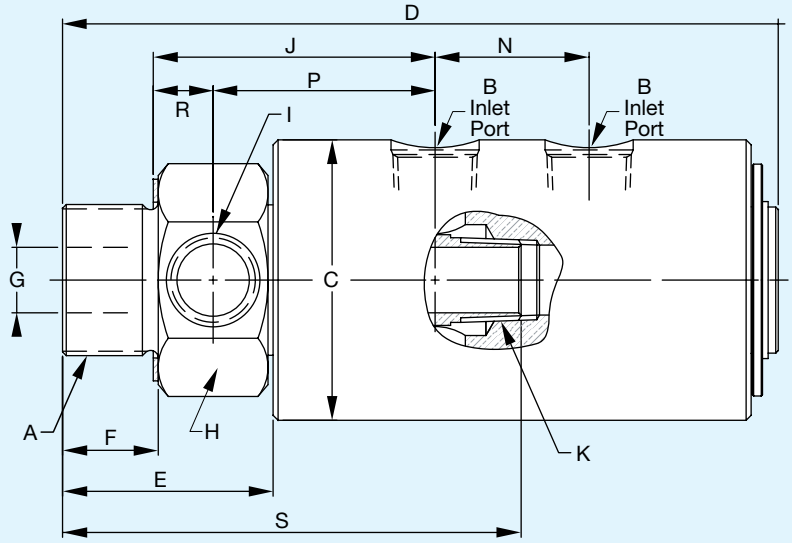

*These models are supplied without inner rotors.

B Port NPT	Ordering No. Model	A Rotor Thread	C Dia.	D	E	F	G Rotor ID	H** Across Flats	I Tap NPT	J Lock-up	K Tap NPT	N	P	R	S	Shpg Wt.
(2) x ¼"	1690-000-115	1" NPT RH	2⅝"	5⅞"	2³⁄₁₆"	1⅛"	⁵⁄₁₆"	46	¼"	2⅝"	¼"	1⁵⁄₃₂"	1¹¹⁄₁₆"	½"	–	3½#
	1690-000-102*	1" NPT RH	2⅝"	5⅞"	2³⁄₁₆"	1⅛"	¹¹⁄₁₆"	46	¼"	2⅝"	¼"	1⁵⁄₃₂"	1¹¹⁄₁₆"	½"	3²⁵⁄₃₂"	3½#
	1690-000-168	G1" (BSP) RH	66.6	150	55.5	18	7.9	46	¼"	67.8	¼"	29.4	42.9	17	–	1.6 Kg
	1690-000-105*	G1" (BSP) RH	66.6	150	55.5	18	17.4	46	¼"	67.8	¼"	29.4	42.9	17	96	1.6 Kg
(2) x ½"	1790-001-113	1¼" NPT RH	3"	8³⁄₁₆"	2¹⁵⁄₃₂"	1⅛"	⅝"	50.8	½"	3¾"	½"	1²¹⁄₃₂"	2⅝"	⅝"	–	6½#
	1790-001-101*	1¼" NPT RH	3"	8³⁄₁₆"	2¹⁵⁄₃₂"	1⅛"	1¹⁄₁₆"	50.8	½"	3¾"	½"	1²¹⁄₃₂"	2⅝"	⅝"	5¹⁄₁₆"	6½#
	1790-001-114	G1¼" (BSP) RH	76	208	63	28	16	50.8	½"	84.2	½"	42	67	15.5	–	3 Kg
	1790-001-112*	G1¼" (BSP) RH	76	208	63	28	27	50.8	½"	84.2	½"	42	67	15.5	129	3 Kg
(2) x ¾"	1890-100	1½" NPT RH	3½"	8⅞"	2⅝"	1³⁄₁₆"	¹³⁄₁₆"	63.5	¾"	4³⁄₃₂"	¾"	1²⁹⁄₃₂"	2¾"	¹¹⁄₁₆"	–	9¾#
	1890-110*	1½" NPT RH	3½"	8⅞"	2⅝"	1³⁄₁₆"	1⅜"	63.5	¾"	4³⁄₃₂"	¾"	1²⁹⁄₃₂"	2¾"	¹¹⁄₁₆"	5¹³⁄₁₆"	9¼#
	1890-060	G1½" (BSP) RH	88.9	225.4	66.6	30.2	20.6	63.5	¾"	91.3	¾"	48.4	69.8	17.5	–	4.4 Kg
	1890-063*	G1½" (BSP) RH	88.9	225.4	66.6	30.2	34.9	63.5	¾"	91.3	¾"	48.4	69.8	17.5	147.6	4.2 Kg

Triple Passage Models

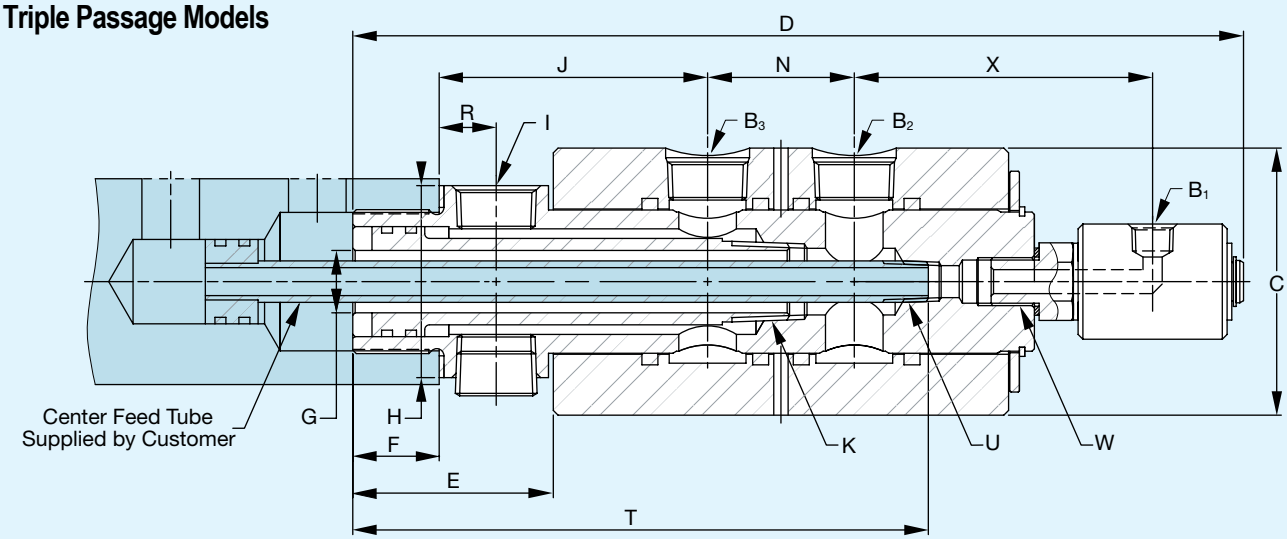

Inlet Ports NPT	Ordering No. Model	A Rotor Thread	C	D	E	F	G Rotor Hole	H** Across Flats	I Tap NPT	J Lock-up	K Tap NPT	N	P	R	T	U Tap NPT	W Tap	X	Shpg. Wt.
B_1 B_2 B_3 ¼" ¾" ¾"	1890-116	1½" NPT RH	3½"	11¹⁷⁄₃₂"	2⅝"	1³⁄₁₆"	¹³⁄₁₆"	63.5	¾"	4³⁄₃₂"	¾"	1²⁹⁄₃₂"	2¹³⁄₁₆"	¹¹⁄₁₆"	7½"	¼"	⅝"-18 UNF, RH	3⅞"	10¾#
	1890-064	G1½" (BSP) RH	88.9	293	66.6	30.2	20.6	63.5	¾"	89	¾"	48.4	69.8	17.5	190	¼"	⅝"-18 UNF, RH	97.6	4.9 Kg

**Metric